30''

MARK	SIZE	NO (1)	LGTH FT	LGTH IN	K FT	K IN
A1	5	2	5	0		
A2	5	2	6	9		
C1	4	1	4	1		
C2	4	1	6	7		
C3	4	1	8	9		
E1	5	2	7	7	4	7
E2	5	2	7	9	4	9
F	4	5	1	3	0	4
G1	4	1	3	6		
G2	4	2	5	9		
G3	4	3	8	4		
H	4	5	6	4	4	8
K1	4	1	1	1		
K2	4	1	2	11		
K3	4	1	4	4		
N1	4	3	4	5		
N2	4	3	6	0		
Q	4	2	2	9		
R	4	3	0	9		
S1	5	2	1	3		
S2	5	4	2	3		
T1	5	2	1	3		
T2	5	4	2	3		
V1	5	2	3	0	1	9
V2	5	2	3	10	2	7
V3	5	2	4	8	3	5
V4	5	3	4	10	3	10
W1	5	2	3	1	1	10
W2	5	2	4	3	3	0
W3	5	1	5	4	4	1

36''

MARK	SIZE	NO (1)	LGTH FT	LGTH IN	K FT	K IN
A1	5	2	5	8		
A2	5	2	7	5		
C1	4	1	6	2		
C2	4	1	8	9		
C3	4	1	10	0		
E1	5	2	8	4	5	4
E2	5	2	8	6	5	6
F	4	6	1	3	0	4
G1	4	1	4	8		
G2	4	2	7	3		
G3	4	3	9	10		
H	4	6	7	2	5	6
K1	4	1	2	2		
K2	4	1	4	0		
K3	4	1	5	0		

36'' (CONTINUED)

MARK	SIZE	NO (1)	LGTH FT	LGTH IN	K FT	K IN
N1	4	3	5	0		
N2	4	3	6	10		
Q	4	2	3	4		
R	4	2	0	10		
S1	5	4	1	3		
S2	5	4	2	3		
T1	5	2	1	6		
T2	5	4	3	3		
V1	5	2	3	3	2	0
V2	5	2	4	1	2	10
V3	5	2	4	10	3	7
V4	5	5	5	7	4	4
W1	5	2	3	4	2	1
W2	5	2	4	5	3	2
W3	5	1	5	6	4	3

42''

MARK	SIZE	NO (1)	LGTH FT	LGTH IN	K FT	K IN
A1	5	2	6	4		
A2	5	2	8	3		
C1	4	1	5	3		
C2	4	1	7	10		
C3	4	1	10	4		
C4	4	1	11	2		
E1	5	2	9	2	6	2
E2	5	2	9	4	6	4
F	4	6	1	3	0	4
G1	4	1	5	11		
G2	4	3	8	8		
G3	4	3	11	4		
H	4	7	7	9	6	1
K1	4	1	1	3		
K2	4	1	3	1		
K3	4	1	4	11		
K4	4	1	5	7		
N1	4	3	6	0		
N2	4	3	7	9		
Q	4	2	3	11		
R	4	4	0	10		
S1	5	2	1	3		
S2	5	2	2	4		
T1	5	2	2	0		
T2	5	4	3	6		
V1	5	2	3	6	2	3
V2	5	2	4	4	3	1
V3	5	2	5	1	3	10
V4	5	2	5	10	4	7
V5	5	4	6	0	4	9
W1	5	2	3	7	2	4

42'' (CONTINUED)

MARK	SIZE	NO (1)	LGTH FT	LGTH IN	K FT	K IN
W2	5	2	4	7	3	4
W3	5	2	5	9	4	6

48''

MARK	SIZE	NO (1)	LGTH FT	LGTH IN	K FT	K IN
A1	5	2	7	0		
A2	5	2	9	2		
C1	4	1	7	0		
C2	4	1	9	7		
C3	4	1	12	1		
C4	4	1	12	5		
E1	5	2	9	11	6	11
E2	5	2	10	1	7	1
F	4	7	1	3	0	4
G1	4	2	6	7		
G2	4	2	10	2		
G3	4	3	12	11		
H	4	7	8	4	6	8
K1	4	1	2	4		
K2	4	1	4	2		
K3	4	1	6	0		
K4	4	1	6	3		
N1	4	3	6	2		
N2	4	3	8	6		
Q	4	2	4	6		
R	4	5	0	10		
S1	5	4	1	6		
S2	5	4	2	9		
T1	5	2	2	0		
T2	5	4	3	9		
V1	5	2	3	9	2	6
V2	5	2	4	6	3	3
V3	5	2	5	4	4	1
V4	5	2	6	1	4	10
V5	5	5	6	8	5	5
W1	5	2	3	10	2	7
W2	5	2	4	11	3	8
W3	5	2	6	0	4	9

54''

MARK	SIZE	NO (1)	LGTH FT	LGTH IN	K FT	K IN
A1	5	2	7	8		
A2	5	2	10	0		
C1	4	1	6	4		
C2	4	1	8	11		
C3	4	1	11	6		
C4	4	2	13	9		

54'' (CONTINUED)

MARK	SIZE	NO (1)	LGTH FT	LGTH IN	K FT	K IN
E1	5	2	10	9	7	9
E2	5	2	10	11	7	11
F	4	8	1	3	0	4
G1	4	3	7	11		
G2	4	3	11	7		
G3	4	3	14	5		
H	4	8	8	11	7	3
K1	4	1	1	6		
K2	4	1	3	5		
K3	4	1	3	5		
K4	4	2	6	10		
N1	4	3	6	10		
N2	4	3	9	4		
Q	4	2	5	1		
R	4	6	0	11		
S1	5	6	1	6		
S2	5	4	3	2		
T1	5	4	2	3		
T2	5	4	4	6		
V1	5	2	4	0	2	9
V2	5	2	4	9	3	6
V3	5	2	5	7	4	4
V4	5	2	6	4	5	1
V5	5	2	7	1	5	10
V6	5	4	7	2	5	11
W1	5	2	3	1	2	10
W2	5	2	4	2	3	11
W3	5	2	6	3	5	0
W4	5	1	7	4	6	1

60''

MARK	SIZE	NO (1)	LGTH FT	LGTH IN	K FT	K IN
A1	5	2	8	5		
A2	5	2	10	11		
C1	4	1	8	2		
C2	4	1	10	9		
C3	4	1	13	5		
C4	4	2	14	11		
E1	5	2	11	6	8	6
E2	5	2	11	8	8	8
F	4	9	1	3	0	4
G1	4	3	9	4		
G2	4	3	13	3		
G3	4	3	16	0		
H	4	9	9	8	8	0
K1	4	1	2	6		
K2	4	1	4	5		
K3	4	1	6	3		
K4	4	2	7	5		

60'' (CONTINUED)

MARK	SIZE	NO (1)	LGTH FT	LGTH IN	K FT	K IN
N1	4	3	7	5		
N2	4	3	10	2		
Q	4	2	5	8		
R	4	6	0	11		
S1	5	6	1	5		
S2	5	6	3	8		
T1	5	4	2	10		
T2	5	4	5	9		
V1	5	2	4	3	3	0
V2	5	2	5	0	3	9
V3	5	2	5	10	4	7
V4	5	2	6	7	5	4
V5	5	2	7	4	6	1
V6	5	5	7	9	6	6
W1	5	2	4	4	3	1
W2	5	2	5	4	4	1
W3	5	2	6	5	5	1
W4	5	2	7	5	6	2

66''

MARK	SIZE	NO (1)	LGTH FT	LGTH IN	K FT	K IN
A1	5	2	8	11		
A2	5	2	11	6		
B1	5	4	2	9		
B2	5	4	3	6		
B3	5	4	4	4		
B4	5	4	5	1		
B5	5	4	5	11		
B6	5	12	6	6		
C1	4	2	7	7		
C2	4	2	10	1		
C3	4	2	12	8		
C4	4	2	15	1		
C5	4	4	16	1		
E1	5	2	14	4	9	4
E2	5	2	14	8	9	8
F	4	10	1	9	0	6
G1	4	1	9	0		
G2	4	3	11	0		
G3	4	3	14	10		
G4	4	3	17	3		
H	4	9	10	6	8	4
J1	5	4	2	9		
J2	5	4	3	10		
J3	5	4	4	11		
J4	5	4	6	0		
K1	4	2	1	7		
K2	4	2	3	5		
K3	4	2	5	4		

66'' (CONTINUED)

MARK	SIZE	NO (1)	LGTH FT	LGTH IN	K FT	K IN
K4	4	2	7	1		
K5	4	4	7	10		
M	4	24	3	9		
N1	4	7	7	10		
N2	4	7	16	1		
P	5	24	5	0	3	3
Q	5	3	6	3		
R	5	7	2	7		
S1	5	4	1	3		
S2	5	4	2	8		
S3	5	4	4	2		
T1	5	4	3	3		
T2	5	4	5	3		

NOTES

1. NUMBER OF BARS IN ONE HEADWALL.
2. DIMENSIONS ARE 0. TO 0. OF BARS.
3. ALL BARS ARE STRAIGHT EXCEPT THOSE SHOWN BELOW.

BENT BAR SHAPES

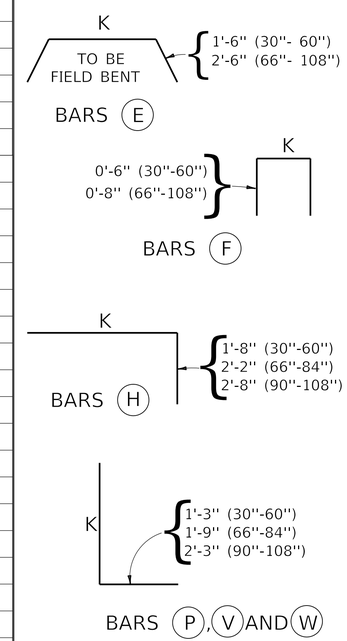

(USE WITH CURRENT RDH-120)

KENTUCKY DEPARTMENT OF HIGHWAYS

BILL OF REINFORCEMENT
30" TO 66" DIAMETER
CIRCULAR PIPE HEADWALLS
30° SKEW

STANDARD DRAWING NO. RDH-330-04

SUBMITTED _____ DIRECTOR DIVISION OF DESIGN _____ DATE

APPROVED _____ STATE HIGHWAY ENGINEER _____ DATE